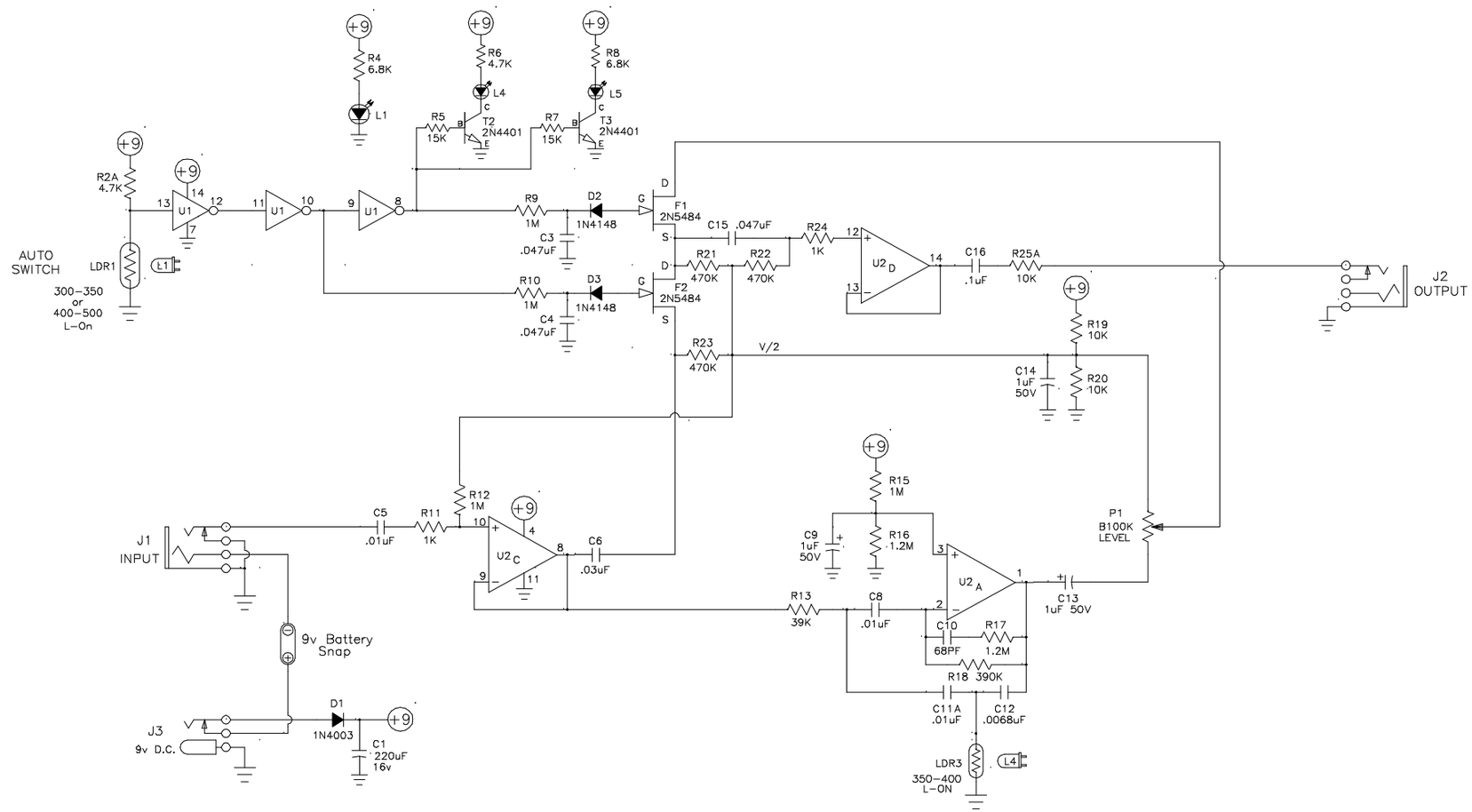

U1 = CD4069UBE
U2 = TL074
T2,T3 = 2N4401 NPN
F1,F2 = 2N5484 FET
LDR1,LDR3 = M79-211564-000
L1,L4,L5 = M16-005734-000

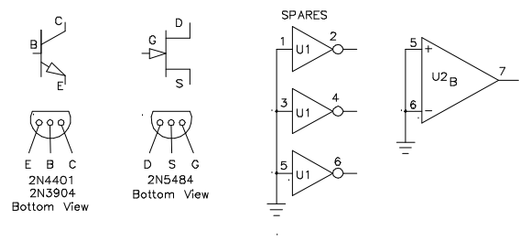

MORLEY

SCALE: 1=1	APPROVED BY Scott Flesher	DRAWN BY S.F.
DATE: 2/23/97		REVISED
PRO SERIES BASS WAH PBA		
schmpbw.dwg		DRAWING NUMBER