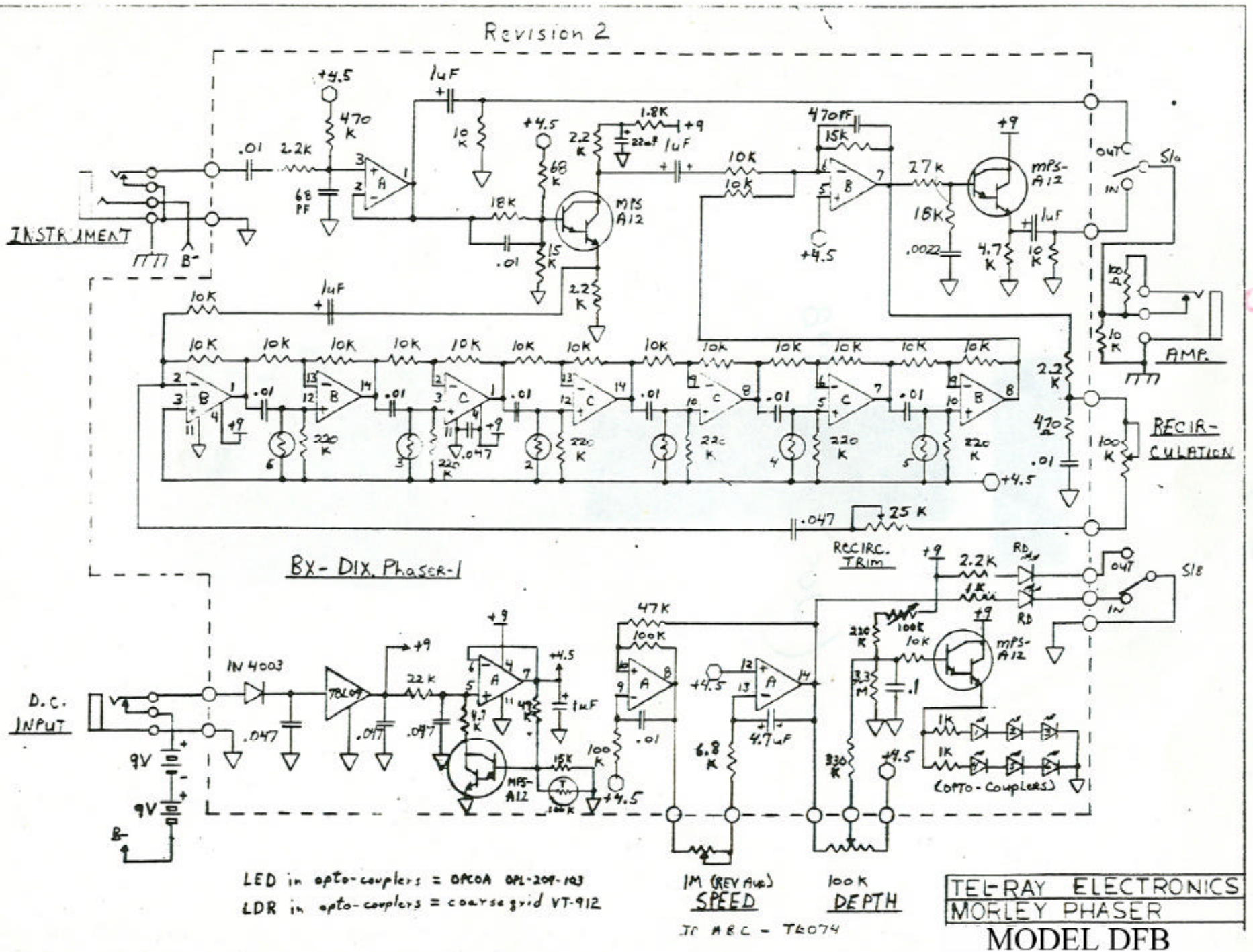
Revision 2
INSTRUMENT
B-
+4.5
470 K
.01
2.2K
68 PF
1uF
10 K
18K
.01
15 K
68 K
MPS A12
2.2 K
1.8K
+9
22mF
1uF
10K
10K
470PF
15K
27K
18K
.0022
4.7 K
10 K
1uF
MPS-A12
OUT
IN
S1a
AMP.
RECIR-CULATION
100 K
10 K
2.2 K
470 Ω
.01
.047
25 K
RECIRC. TRIM
BX- DIX. Phaser-1
D.C. INPUT
9V
9V
B-
IN 4003
.047
78L09
22 K
.047
.047
4.7 K
49 K
1uF
15K
100 K
47K
100K
.01
6.8 K
4.7uF
330 K
220 K
100K
10K
3.3 M
.1
1K
1K
(OPTO-Couplers)
RD
RD
OUT
IN
S1B
1M (REV AUD)
SPEED
100 K
DEPTH
LED in opto-couplers = OPCOA OPL-209-103
LDR in opto-couplers = coarse grid VT-912
TO ABC - TL074
TEL-RAY ELECTRONICS
MORLEY PHASER
MODEL DFB